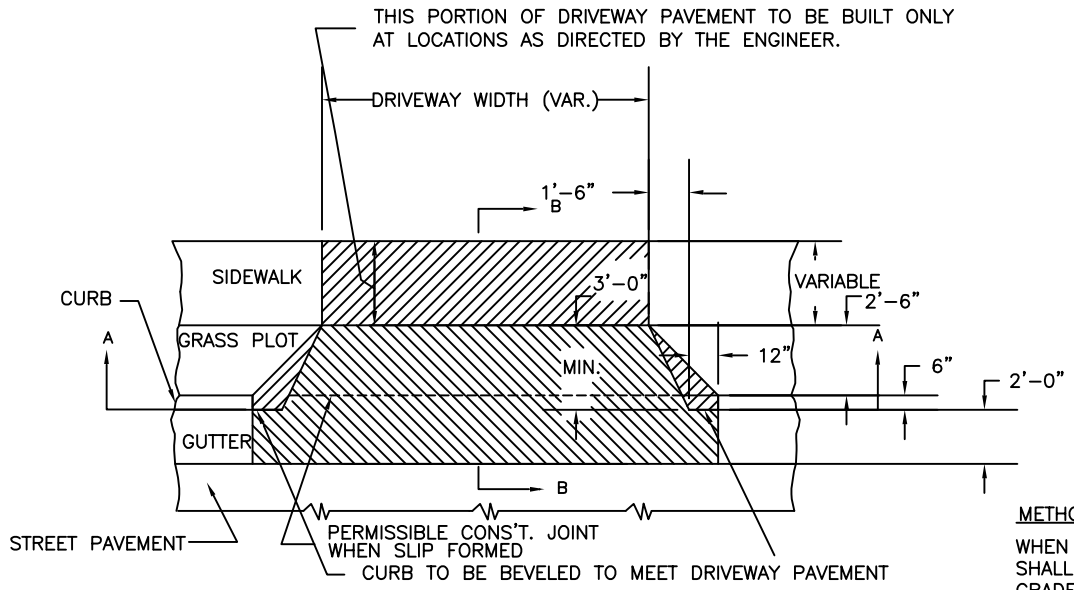

PLAN

DETAIL OF PROPOSED DRIVEWAY

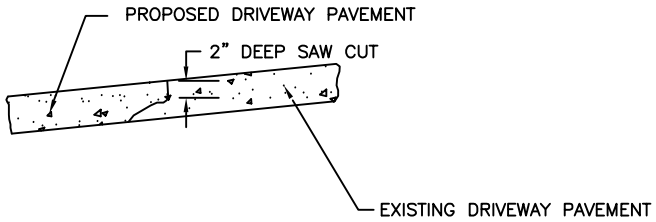

METHOD OF TIE IN

WHEN EXISTING DRIVEWAY PAVEMENT IS CONCRETE. A SAW CUT 2" DEEP SHALL BE REQUIRED AT THE POINT OF TIE IN WITH EXISTING DRIVEWAY GRADE. SAW JOINT TO BE PERPENDICULAR TO EDGE OF EXISTING DRIVEWAY PAVEMENT.

GENERAL NOTES:

NO CONSTRUCTION JOINT WILL BE PERMITTED IF FORMS ARE USED TO CAST DRIVEWAY. SLIP FORMING OF CURB AND GUTTER WILL PERMIT USE OF CONSTRUCTION JOINT.

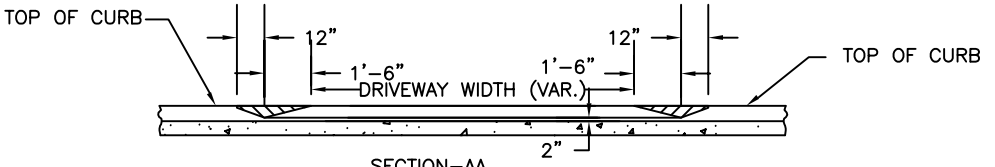

SECTION-AA

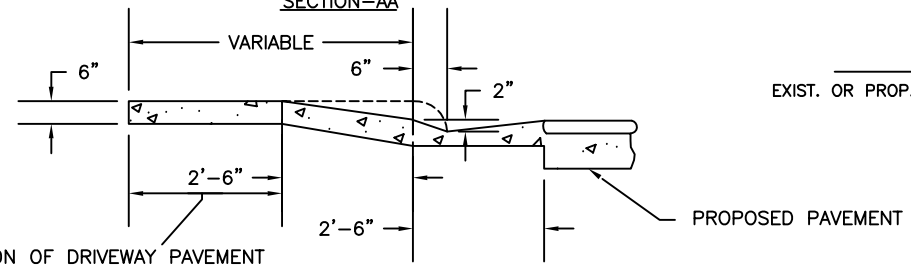

SECTION-BB

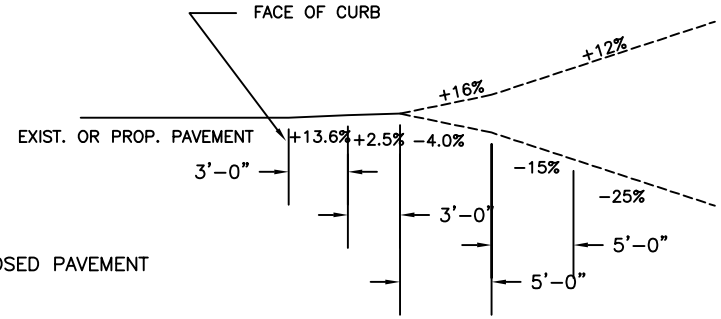

DRIVEWAY TURNOUT GRADES

DATE	REVISED	SCALE	DETAIL
8/16/04	8/18/04	NOT TO SCALE	R-6

STANDARD DRIVEWAY TURNOUT DROP CURB TYPE

CITY OF BURLINGTON, NORTH CAROLINA

ENGINEERING DEPARTMENT